WIRING DIAGRAM

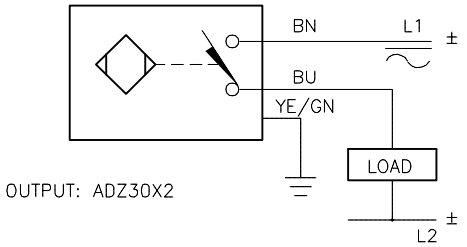

OUTPUT: ADZ30X2

SHORT-CIRCUIT AND OVERLOAD PROTECTED

LOCKNUT LN-M18

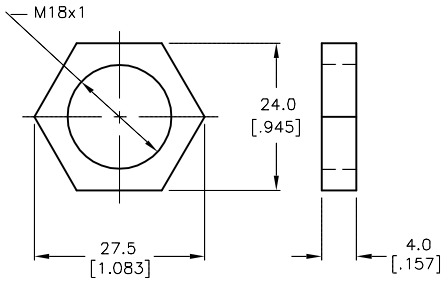

SPECIFICATIONS

RATED OPERATING DISTANCE	8mm [.197"]
MOUNTING MODE	FLUSH
HYSTERESIS	3-15%
MIN. REPEAT ACCURACY	≤ 2%
TEMPERATURE DRIFT	≤ ± 10%
OPERATING TEMPERATURE	-25°C to +70°C (-13°F to +158°F)
RATED OPERATIONAL VOLTAGE	20-250 VAC/10-300 VDC
RATED OPERATIONAL CURRENT (AC/DC)	≤ 400 mA/≤ 300 mA
MAINS FREQUENCY	50-60 Hz
RESIDUAL CURRENT	≤ 1.7 mA
RATED INSULATION VOLTAGE	≤ 1.5 kV
SURGE CURRENT	≤ 3.0 A (≤ 20 ms MAX. 5 Hz)
SHORT-CIRCUIT PROTECTED	YES
MAX. VOLTAGE DROP	≤ 6.0 V
REVERSE POLARITY PROTECTION	INCORPORATED
WIRE-BREAK PROTECTION	INCORPORATED
OUTPUT FUNCTION	2-WIRE, NORMALLY OPEN, AC/DC
SMALLEST OPERATING CURRENT	≥ 3.0 mA
MAX. SWITCHING FREQUENCY	≤ 0.03 kHz
ACTIVE FACE	PLASTIC, PA12-GF20
SHOCK	30 g, 11 ms
VIBRATION	55 Hz, 1 mm AMPLITUDE (IN ALL 3 PLANES)
DEGREE OF PROTECTION	IP67
LED FUNCTION	GREEN = POWER ON GREEN FLASHING = SHORT CIRCUIT PROTECTION RED = SWITCHING STATUS

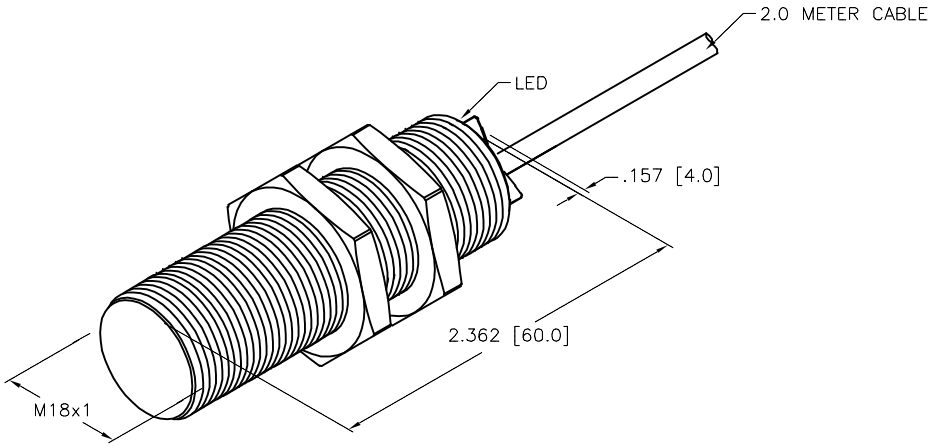

SOURCE DRAWING - FOR REFERENCE ONLY

RELATED DOCUMENTS	3RD ANGLE PROJECTION	THIS DRAWING IS CONFIDENTIAL AND THE PROPERTY OF TURCK INC. USE OF THIS DOCUMENT WITHOUT WRITTEN PERMISSION IS PROHIBITED.	TURCK	3000 CAMPUS DRIVE MINNEAPOLIS, MN 55441 1-800-544-7769 (763) 553-7300 (763) 553-0708 fax www.turck.us
1. 2. 3. 4.				
MATERIAL	ALL DIMENSIONS DISPLAYED ON THIS DRAWING ARE FOR REFERENCE ONLY CONTACT TURCK FOR MORE INFORMATION	DRFT RDS / DATE 02/21/11	DESCRIPTION	BI8-G18-ADZ30X2
		APVD / SCALE 1=1.0		
FINISH		UNIT OF MEASUREMENT **INCH [MILLIMETER]** DO NOT SCALE THIS DRAWING	IDENTIFICATION NO. 4616300	REV E
			FILE: 4616300	SHEET 1 OF 1

REV	DESCRIPTION	BY	DATE	ECO NO.
E	UPDATE LED SPECS	NF	05/05/20	75841

Approved 05/05/2020, work order #212472 by A.F.