All Stainless Steel, Dry & Liquid Filled

400/500 SERIES

- Corrosion-resistant fillable dry or liquid-filled gauge
- Vacuum and compound ranges through 0 psi to 100,000 psi
- 1-1/2", 2-1/2", 4 and 6" gauge sizes
- Stainless steel case
- 316 stainless steel wetted parts
- ECE-R110 Certification for CNG/LNG Pressure Gauge Component (Part number 25-410-300-psi/bar only)

	SERIES	SPECIFICATIONS
Pressure ranges	400/500 Series (all)	Vacuum and compound ranges through 0 psi to 100,000 psi
Accuracy	15-401, 15-411	±2.5% full scale
	25-400, 25-410, 25-406, 25-500, 25-506, 25-510	±1.6% full scale
	40-400, 40-410, 40-500, 40-510, 60-400, 60-410, 60-500, 60-510	±1% full scale
Temperature ranges*	15-401, 15-411, 25-400, 25-406, 25-410	Media -40 °F to 212 °F (-40 °C to 100 °C) Ambient -40 °F to 140 °F (-40 °C to 60 °C)
	40-400, 40-410, 60-400, 60-410	Media -40 °F to 392 °F (-40 °C to 200 °C) Ambient -40 °F to 140 °F (-40 °C to 60 °C)
	500 Series (all)	Media -4 °F to 212 °F (-20 °C to 100 °C) Glycerine fill -40 °F to 212 °F (-40 °C to 100 °C) Special fill Ambient -4 °F to 140 °F (-20 °C to 60 °C) Glycerine fill -40 °F to 140 °F (-40 °C to 60 °C) Special fill
Measuring element	15-401, 15-411, 25-400, 25-406, 25-410, 25-500, 25-506,25-510, 40-400, 40-410, 40-500, 40-510, 60-400, 60-410, 60-500, 60-510 (up to 600 psi)	316 stainless steel C-Type Bourdon tube
	25-400, 25-406, 25-410, 25-500, 25-506, 25-510, 40-400, 40-410, 40-500, 40-510, 60-400, 60-410, 60-500, 60-510 (greater than 600 psi)	Coiled safety tube
Connection	15-401, 15-411	1/8″ NPT, 316 stainless steel
	25-406, 25-506	1/4″ NPT, nickel-plated brass
	25-400, 25-410, 25-500, 25-510	1/4″ NPT, 316 stainless steel
	40-400, 40-410, 40-500, 40-510, 60-400, 60-410, 60-500, 60-510	1/2″ NPT, 316 stainless steel. 9/16″ – 18 high pressure connections are standard on 0 - 30,000 psi and higher
Case	15-401, 15-411, 40-400, 40-410, 60-400, 60-410, 60-500, 60-510	304 stainless steel (Optional 316 stainless steel) with safety relief plug
	25-400, 25-406, 25-410, 25-500, 25-506, 25-510, 40-500, 40-510	Polished 304 stainless steel with safety relief plug
Cover ring	15-401, 15-411, 25-400, 25-406, 25-410, 25-500, 25-506, 25-510, 40-400, 40-410, 40-500, 40-510	Polished 304 stainless steel
	60-400, 60-410, 60-500, 60-510	Polished 304 stainless steel bayonet ring
Lens	15-401, 15-411, 40-400, 40-410, 40-500, 40-510	Instrument glass
	25-400, 25-406, 25-410, 25-500, 25-506, 25-510	Trogamide
	60-400, 60-410, 60-500, 60-510	Laminated safety glass
Pointer	115-401, 15-411	Black finished aluminum
	25-400, 25-410, 25-500, 25-510, 40-400, 40-410, 40-500, 40-510	Balanced aluminum, black finish
	60-400, 60-410, 60-500, 60.510	Balanced micro-adjustable aluminum, black finish
Dial	15-401, 15-411	Aluminum, white background with black scale. Single scale psi. UV resistant
	25-400, 25-406, 25-410, 25-500, 25-506, 25-510, 40-400, 40-410, 40-500, 40-510, 60-400, 60-410, 60-500, 60-510	Aluminum, white background with black scale. UV resistant.
Movement	15-401, 15-411, 25-400, 25-406, 25-410, 25-500, 25-506, 25-510	Stainless steel with highly polished bearing surfaces
	40-400, 40-410, 40-500, 40-510	All stainless steel with internal zero stop and highly polished bearing surfaces
	60-400, 60-410, 60-500, 60-510	Stainless steel with highly polished bearing surfaces An internal zero stop is standard
Fill liquid**	25-500, 25-510, 40-500, 40-510, 60-500, 60-510	Glycerine

OPERATING SPECIFICATIONS

1. Working Pressure Limitations
   a. Dynamic Pressure
   The working pressure should be limited to 60% of the dial range.
   b. Static Pressure
   The working pressure, where no sharp fluctuations occur, should be limited to 90% of the dial range

APPLICATIONS

- Chemical processing
- Oil field & offshore
- Paper mills
- Agriculture plants
- Marine
- Water & wastewater

* For every 18 °F (10 °C) shift in temperature from which the gauge is calibrated, the user can experience up to ±0.4% additional error.

** See page 53 for gauge fill options.

For details on accuracy/standard dial configuration and dial layouts, see pages 54-59.

ORDERING INFORMATION

GAUGE SIZES	15	1-1/2″	25	2-1/2″	40 ***	4″	60 *** 6″
CASE TYPES	400	All SS, dry/fillable, bottom connection	410	All SS, dry/fillable, back connection	506	Ammonia, liquid filled, bottom connection	
	401	All SS, dry, bottom connection	411	All SS, dry, back connection			
	402	SS case, solid front, dry, bottom connection**	500	SS case, liquid filled, bottom connection	510	SS case, liquid filled, back connection	
	406	Ammonia, dry/fillable, bottom connection	502	SS case, solid front, liquid filled, bottom connection**			
PRESSURE RANGES	30vac	-30 inHg to 0 psi	100	0 psi to 100 psi	5000	0 psi to 5,000 psi	
	30/15	-30 inHg to 0 psi to 15 psi	160	0 psi to 160 psi	6000	0 psi to 6,000 psi	
	30/30	-30 inHg to 0 psi to 30 psi	200	0 psi to 200 psi	10000	0 psi to 10,000 psi	
	30/60	-30 inHg to 0 psi to 60 psi	300	0 psi to 300 psi	15000	0 psi to 15,000 psi	
	30/100	-30 inHg to 0 psi to 100 psi	400	0 psi to 400 psi	20000	0 psi to 20,000 psi	
	30/160	-30 inHg to 0 psi to 160 psi	600	0 psi to 600 psi	30000	0 psi to 30,000 psi	
	30/200	-30 inHg to 0 psi to 200 psi	800	0 psi to 800 psi	40000	0 psi to 40,000 psi	
	30/300	-30 inHg to 0 psi to 300 psi	1000	0 psi to 1,000 psi	60000	0 psi to 60,000 psi	
	15	0 psi to 15 psi	1500	0 psi to 1,500 psi	80000	0 psi to 80,000 psi	
	30	0 psi to 30 psi	2000	0 psi to 2,000 psi	100000	0 psi to 100,000 psi	
	60	0 psi to 60 psi	3000	0 psi to 3,000 psi			
SCALE OPTIONS	psi	psi single scale	psi/kg/cm²	psi/kg/cm² dual scale			
	psi/kPa	psi/kPa dual scale	psi/bar	psi/bar dual scale			
CONNECTION SIZES	1/8	1/8″ NPT	1/2	1/2″ NPT	SST	SAE J1926-3:7/16-20 Adjustable	
	1/4	1/4″ NPT	9/16-18	9/16″-18 UNF 2B high pressure cone*			
OPTIONS	SSFF	304SS Front Flange	SSFR	304SS Flange Ring	SP	Red Set Pointer	
	SSRF	304SS Rear Flange	FR	Flange Ring	LM	Laser Marking	
	SSBU	Stainless Steel Bezel & U-Clamp	AP	Adjustable Pointer	ST	Stainless Steel Tagging	
	SPMC	304SS Panel Mount Clamp	SG	Safety Glass Lens	ST5	Stainless Steel Threaded Orifice 0.5 mm	
	PMC	Steel Panel Mount Clamp	MIP	Maximum Indicating Pointer	ST8	Stainless Steel Threaded Orifice 0.8 mm	

Please consult your local NOSHOK Distributor or NOSHOK, Inc. for availability and delivery information.

NOTE: Refer to 400/500 Series options & Accessories chart on page 52 for availability by part number.

* Connection size for pressures 30,000 psi and above. Equivalent to F250C Parker Autoclave.

** 6″ solid front, safety case and blowout back is standard for pressures 80,000 psi and above.

*** On 40-400, 40-410, 40-500, 40-510, 60-400, 60-410, 60-500, and 60-510 models with pressure ranges between 20,000 and 60,000 psi, the accurary is ±1.5% or 1.6%.

EXAMPLE

40 – 500 – 600 – psi – 1/2 – MIP

Gauge size .....4"
Case type ..... SS case, liquid filled, bottom connection
Pressure range & scale option .....0 psi to 600 psi
Connection size..... 1/2" NPT
Option..... Maximum Indicating Pointer

15-401

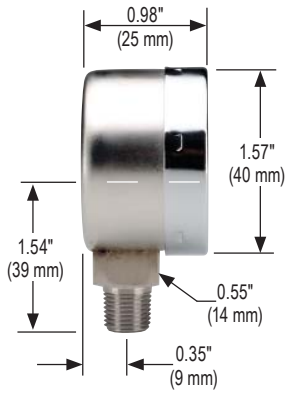

25-400/500

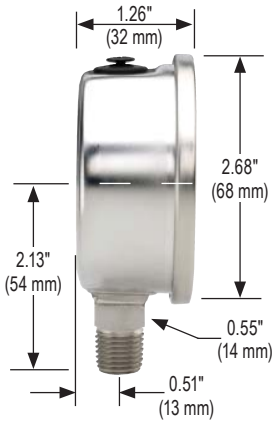

40-400/500

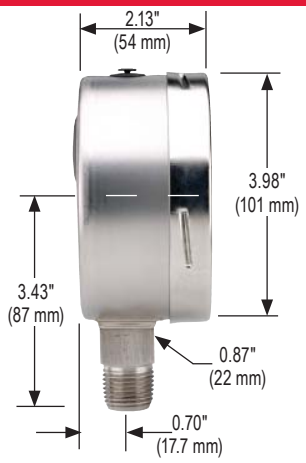

Dimensions

60-400/500

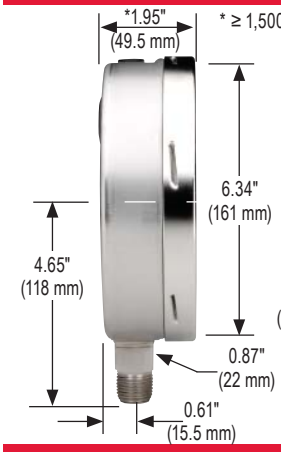

15-411

* ≥ 1,500 psi increase by 0.67" (17 mm)

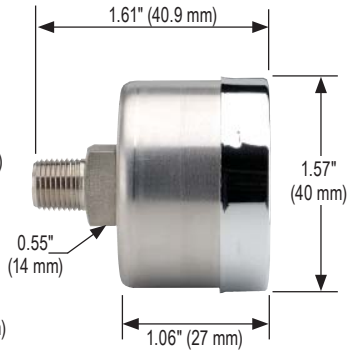

25-410/510

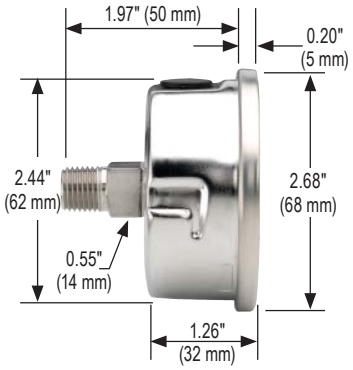

40-410/510

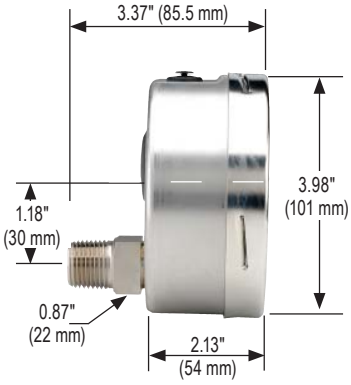

60-410/510

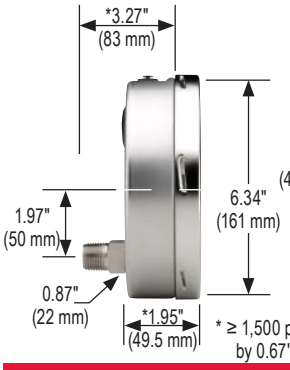

40-400/500 Front Flange

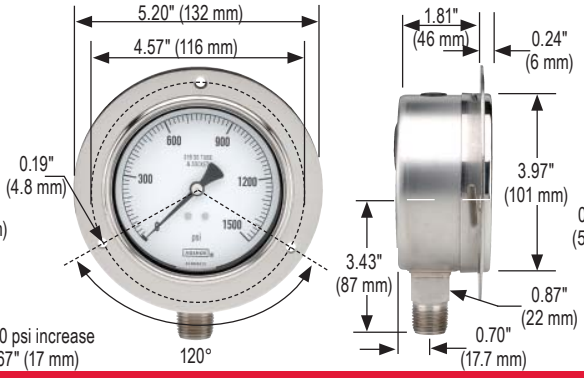

* ≥ 1,500 psi increase by 0.67" (17 mm)

60-400/500 Front Flange

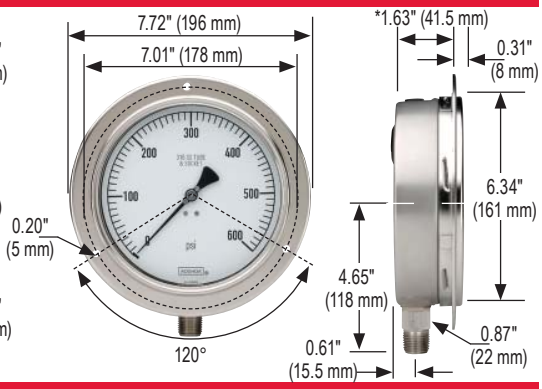

25-410/510 Front Flange

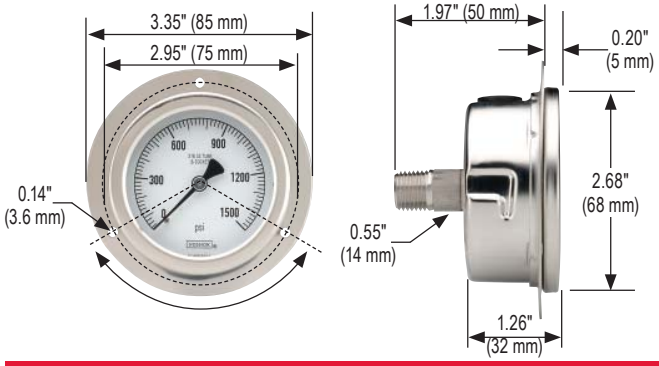

40-410/510 Front Flange

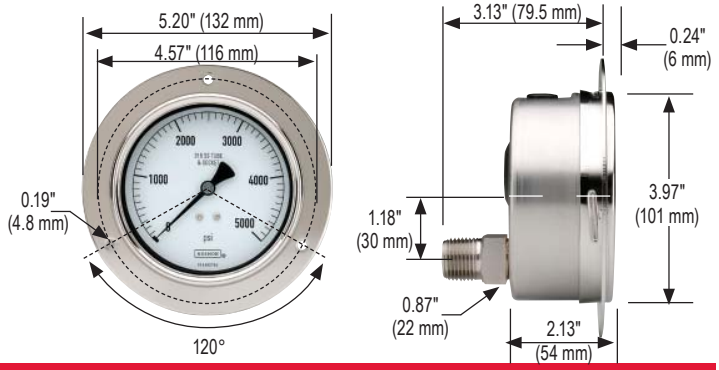

60-410/510 Front Flange

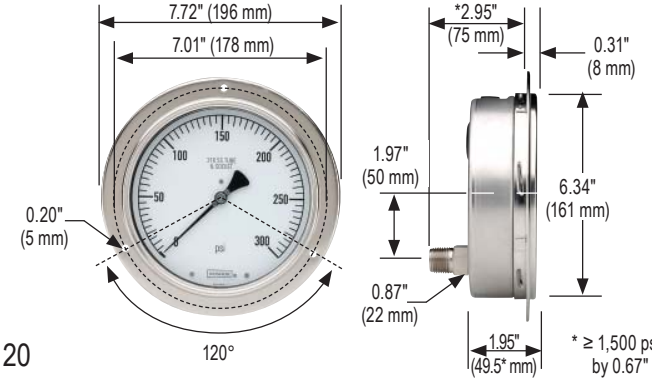

* ≥ 1,500 psi increase by 0.67" (17 mm)

40-400/500 Rear Flange

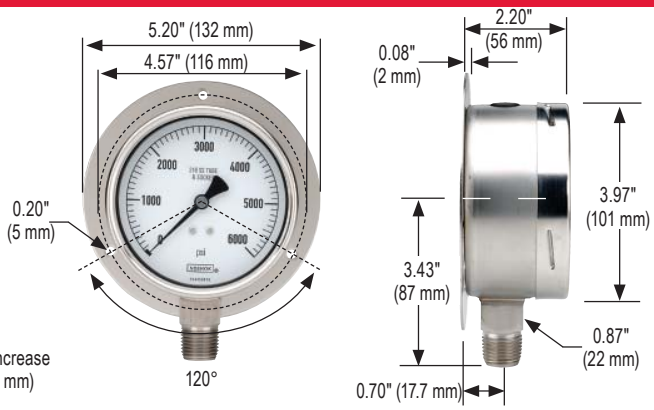

60-400/500 Rear Flange

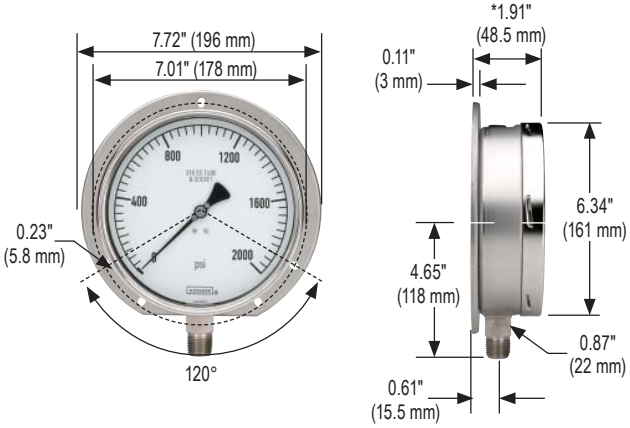

40-410/510 Rear Flange

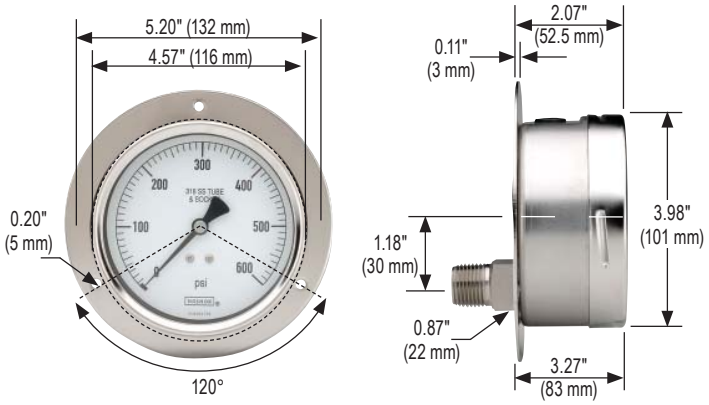

60-410/510 Rear Flange

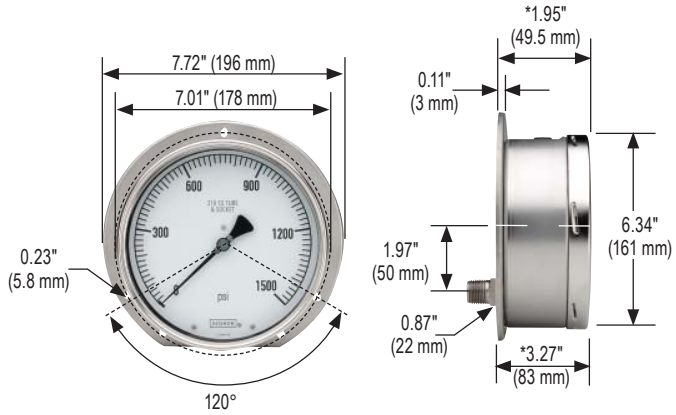

25-410/510 Flange Ring

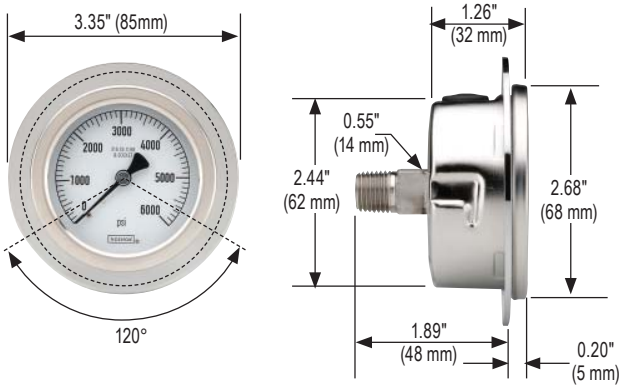

25-410/510 Panel Mount Clamp

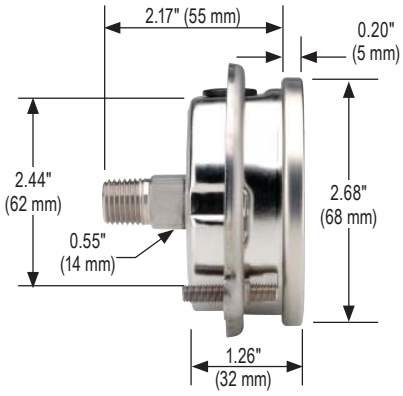

40-410/510 SS Narrow Bezel w/U-Clamp

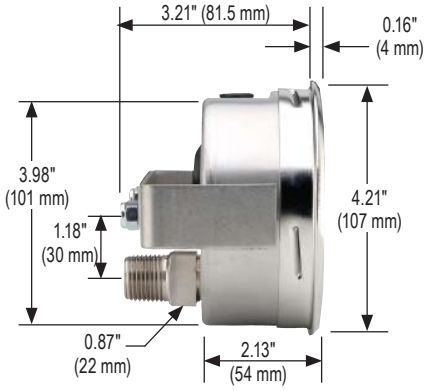

60-410/510 SS Narrow Bezel w/U-Clamp

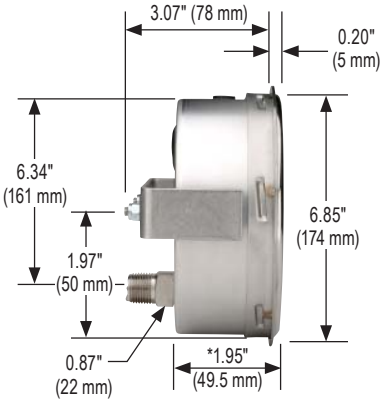

* Dimension will be 0.67" (17 mm) for pressure ranges above 1,500 psi.